REV.	DATE	ECN NO.	MODIFICATION	APPROVER
A0	2025.10.23	/	NEW	Abel

一、Product illustration

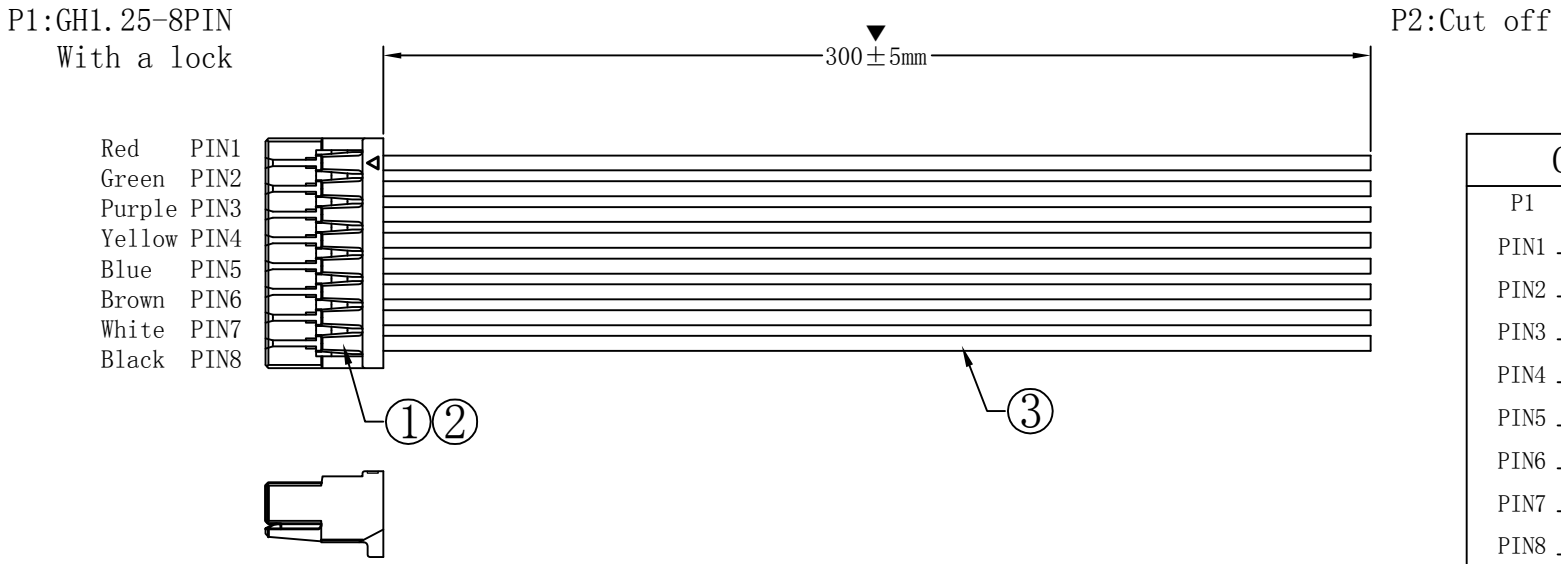

CONNECTION

P1		P2
PIN1	Red	Cut off
PIN2	Green	Cut off
PIN3	Purple	Cut off
PIN4	Yellow	Cut off
PIN5	Blue	Cut off
PIN6	Brown	Cut off
PIN7	White	Cut off
PIN8	Black	Cut off

二.Technical requirements:

1. The product must have 100% conductivity, no short circuit, open circuit, or misalignment.
2. Conform to the requirements of the ROHS
3. The conductors shall not have any damage, dents, injuries, copper leakage, or other badness phenomena.

ITEM	Name	Material No	Specification description	UOM	QTY
③	Wire	UL3132-28-BK-ZW	UL3132 28AWG (7/0.12TS) OD:1.12mm Black silicone material	M	0.303
③	Wire	UL3132-28-WH-ZW	UL3132 28AWG (7/0.12TS) OD:1.12mm White silicone material	M	0.303
③	Wire	UL3132-28-BN-ZW	UL3132 28AWG (7/0.12TS) OD:1.12mm Brown silicone material	M	0.303
③	Wire	UL3132-28-BU-ZW	UL3132 28AWG (7/0.12TS) OD:1.12mm Blue silicone material	M	0.303
③	Wire	UL3132-28-YE-ZW	UL3132 28AWG (7/0.12TS) OD:1.12mm Yellow silicone material	M	0.303
③	Wire	UL3132-28-VT-ZW	UL3132 28AWG (7/0.12TS) OD:1.12mm Purple silicone material	M	0.303
③	Wire	UL3132-28-GN-ZW	UL3132 28AWG (7/0.12TS) OD:1.12mm Green silicone material	M	0.303
③	Wire	UL3132-28-RD-ZW	UL3132 28AWG (7/0.12TS) OD:1.12mm Red silicone material	M	0.303
②	Housing	GH1.25-8Y-SH	Spacing:1.25mm(GH) 5PIN White Housing With a lock	PCS	1
①	terminal	GH1.25-TE-SH	Spacing:1.25mm(GH) Phosphor bronze tin plated terminal	PCS	8

GENERAL TOLERANCE			
SELECTION / TOL.	1	2	3
X.XXX	±0.10	±0.15	±0.20
X.XX	±0.15	±0.20	±0.25
X.X	±0.20	±0.25	±0.30
X.	±0.25	±0.30	±0.50
ANGLE	±2°		

UNITS mm
MAT'L
FINISH
Q'TY

NAME(INTENDED USE): 线材
PART NO.(INTENDED USE): CB4428008400
APPD: Abel
CHKD: TOM
DR: XCF

ATOM® 深圳市爱特姆科技有限公司
SHENZHEN ATOM TECHNOLOGY CO.,LTD.

TITLE: Customer Drawing For UL3132 28AWG GH1.25mm-8P 尾端平切 红绿紫黄蓝棕白黑电子线 L=300mm 袋装

DWG NO.: ATOM-A11826

SCALE	SHEET	REV.
1:1	1/1	A0